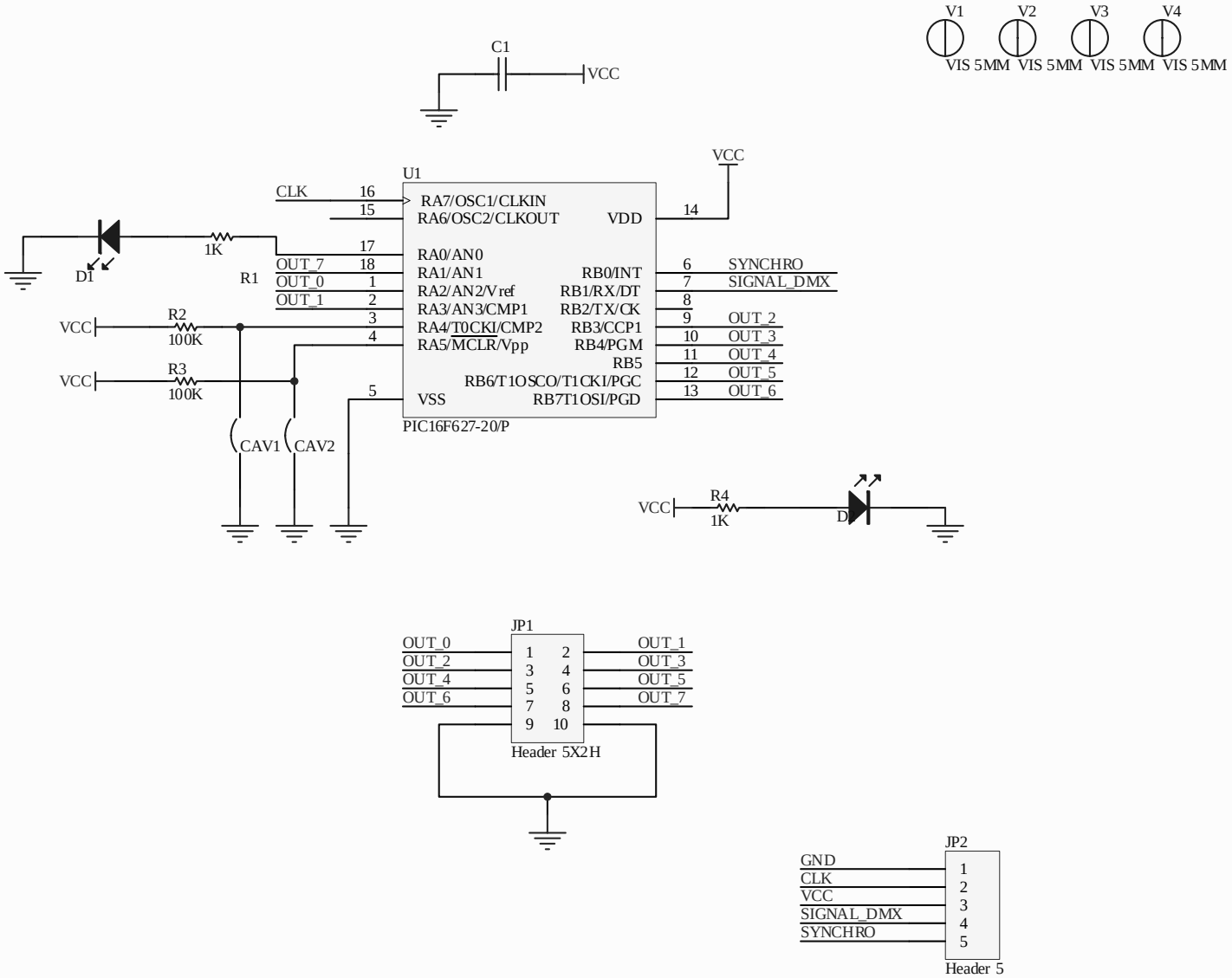

Title		
Size A	Number	Revision
Date: 06/10/2006	Sheet of	
File: D:\TECHNIQUE\..\EXTENSION.SCHDOC	Drawn By:	